UNIVERSITY OF CAMBRIDGE INTERNATIONAL EXAMINATIONS
General Certificate of Education
Advanced Subsidiary Level and Advanced Level

CANDIDATE NAME									
CENTRE NUMBER						CANDIDATE NUMBER				

8051363969

PHYSICS **9702/22**

Paper 2 AS Structured Questions **October/November 2009**

1 hour

Candidates answer on the Question Paper.

No Additional Materials are required.

READ THESE INSTRUCTIONS FIRST

Write your Centre number, candidate number and name on all the work you hand in.
Write in dark blue or black pen.
You may use a soft pencil for any diagrams, graphs or rough working.
Do not use staples, paper clips, highlighters, glue or correction fluid.
DO **NOT** WRITE IN ANY BARCODES.

Answer **all** questions.
You may lose marks if you do not show your working or if you do not use appropriate units.

At the end of the examination, fasten all your work securely together.
The number of marks is given in brackets [ ] at the end of each question or part question.

For Examiner's Use	
1	
2	
3	
4	
5	
6	
7	
Total	

This document consists of **18** printed pages and **2** blank pages.

DC (SHW 00445 4/09) 13800/4
© UCLES 2009

Data

speed of light in free space,	$c = 3.00 \times 10^{8}\ \text{m s}^{-1}$
permeability of free space,	$\mu_0 = 4\pi \times 10^{-7}\ \text{H m}^{-1}$
permittivity of free space,	$\varepsilon_0 = 8.85 \times 10^{-12}\ \text{F m}^{-1}$
elementary charge,	$e = 1.60 \times 10^{-19}\ \text{C}$
the Planck constant,	$h = 6.63 \times 10^{-34}\ \text{J s}$
unified atomic mass constant,	$u = 1.66 \times 10^{-27}\ \text{kg}$
rest mass of electron,	$m_e = 9.11 \times 10^{-31}\ \text{kg}$
rest mass of proton,	$m_p = 1.67 \times 10^{-27}\ \text{kg}$
molar gas constant,	$R = 8.31\ \text{J K}^{-1}\ \text{mol}^{-1}$
the Avogadro constant,	$N_A = 6.02 \times 10^{23}\ \text{mol}^{-1}$
the Boltzmann constant,	$k = 1.38 \times 10^{-23}\ \text{J K}^{-1}$
gravitational constant,	$G = 6.67 \times 10^{-11}\ \text{N m}^2\ \text{kg}^{-2}$
acceleration of free fall,	$g = 9.81\ \text{m s}^{-2}$

© UCLES 2009

Formulae

uniformly accelerated motion, $s = ut + \frac{1}{2}at^2$
$v^2 = u^2 + 2as$

work done on/by a gas, $W = p\Delta V$

gravitational potential, $\phi = -\frac{Gm}{r}$

hydrostatic pressure, $p = \rho gh$

pressure of an ideal gas, $p = \frac{1}{3}\frac{Nm}{V}\langle c^2 \rangle$

simple harmonic motion, $a = -\omega^2 x$

velocity of particle in s.h.m., $v = v_0 \cos \omega t$
$v = \pm \omega \sqrt{(x_0^2 - x^2)}$

electric potential, $V = \frac{Q}{4\pi\varepsilon_0 r}$

capacitors in series, $1/C = 1/C_1 + 1/C_2 + \ldots$

capacitors in parallel, $C = C_1 + C_2 + \ldots$

energy of charged capacitor, $W = \frac{1}{2}QV$

resistors in series, $R = R_1 + R_2 + \ldots$

resistors in parallel, $1/R = 1/R_1 + 1/R_2 + \ldots$

alternating current/voltage, $x = x_0 \sin \omega t$

radioactive decay, $x = x_0 \exp(-\lambda t)$

decay constant, $\lambda = \frac{0.693}{t_{\frac{1}{2}}}$

© UCLES 2009

[Turn over

Answer **all** the questions in the spaces provided.

1 A simple pendulum may be used to determine a value for the acceleration of free fall g. Measurements are made of the length L of the pendulum and the period T of oscillation.

The values obtained, with their uncertainties, are as shown.

$T = (1.93 \pm 0.03)$ s
$L = (92 \pm 1)$ cm

(a) Calculate the percentage uncertainty in the measurement of

(i) the period T,

uncertainty = ... % [1]

(ii) the length L.

uncertainty = ... % [1]

© UCLES 2009

(b) The relationship between T, L and g is given by

$$g = \frac{4\pi^2 L}{T^2} .$$

Using your answers in **(a)**, calculate the percentage uncertainty in the value of g.

uncertainty = ... % [1]

(c) The values of L and T are used to calculate a value of g as 9.751 m s^{-2}.

(i) By reference to the measurements of L and T, suggest why it would not be correct to quote the value of g as 9.751 m s^{-2}.

.....

..... [1]

(ii) Use your answer in **(b)** to determine the absolute uncertainty in g.

Hence state the value of g, with its uncertainty, to an appropriate number of significant figures.

g = ... ± ..... m s^{-2} [2]

© UCLES 2009

[Turn over

2 **(a)** **(i)** State one **similarity** between the processes of evaporation and boiling.

.....

..... [1]

(ii) State two **differences** between the processes of evaporation and boiling.

1. .....

.....

2. .....

.....

[4]

(b) Titanium metal has a density of $4.5\,g\,cm^{-3}$.

A cube of titanium of mass 48 g contains 6.0×10^{23} atoms.

(i) Calculate the volume of the cube.

volume = ... cm^3 [1]

© UCLES 2009

(ii) Estimate

1. the volume occupied by each atom in the cube,

volume = ... cm^3 [1]

2. the separation of the atoms in the cube.

separation = ... cm [1]

3 A small ball is thrown horizontally with a speed of $4.0\,m\,s^{-1}$. It falls through a vertical height of 1.96 m before bouncing off a horizontal plate, as illustrated in Fig. 3.1.

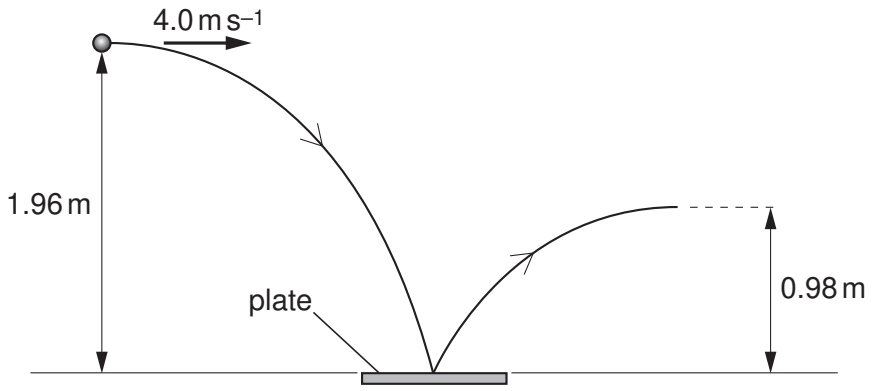

Fig. 3.1

Air resistance is negligible.

(a) For the ball, as it hits the horizontal plate,

(i) state the magnitude of the horizontal component of its velocity,

horizontal velocity = ... $m\,s^{-1}$ [1]

(ii) show that the vertical component of the velocity is $6.2\,m\,s^{-1}$.

[1]

© UCLES 2009

(b) The components of the velocity in **(a)** are both vectors.

Complete Fig. 3.2 to draw a vector diagram, to scale, to determine the velocity of the ball as it hits the horizontal plate.

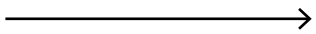

Fig. 3.2

velocity = ...$m\,s^{-1}$

at ..... ° to the vertical
[3]

(c) After bouncing on the plate, the ball rises to a vertical height of 0.98 m.

(i) Calculate the vertical component of the velocity of the ball as it leaves the plate.

vertical velocity = ... $m\,s^{-1}$ [2]

(ii) The ball of mass 34 g is in contact with the plate for a time of 0.12 s.

Use your answer in **(c)(i)** and the data in **(a)(ii)** to calculate, for the ball as it bounces on the plate,

1. the change in momentum,

change = ... $kg\,m\,s^{-1}$ [3]

2. the magnitude of the average force exerted by the plate on the ball due to this momentum change.

force = ... N [2]

© UCLES 2009

4 **(a)** Explain what is meant by *strain energy* (*elastic potential energy*).

.....

.....

..... [2]

(b) A spring that obeys Hooke's law has a spring constant k.

Show that the energy E stored in the spring when it has been extended elastically by an amount x is given by

$$E = \tfrac{1}{2}kx^2.$$

[3]

(c) A light spring of unextended length 14.2 cm is suspended vertically from a fixed point, as illustrated in Fig. 4.1.

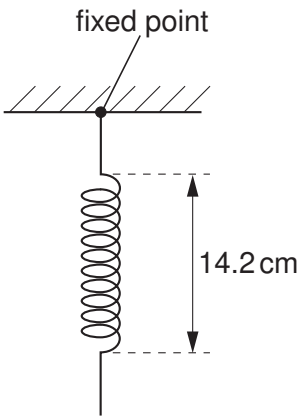

Fig. 4.1

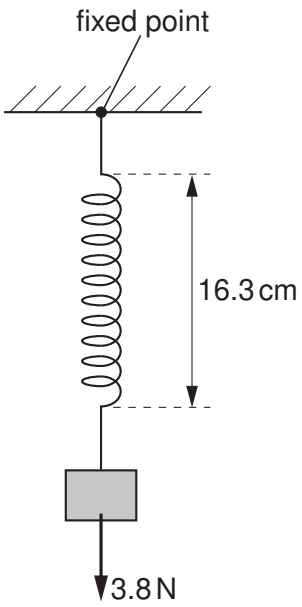

Fig. 4.2

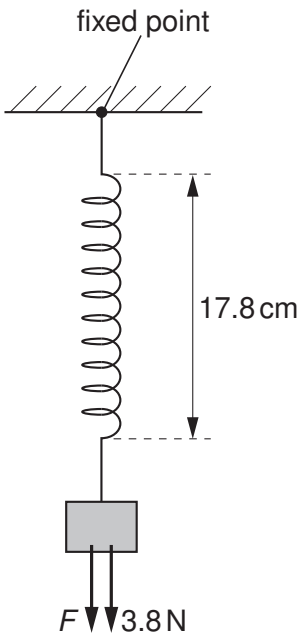

Fig. 4.3

A mass of weight 3.8 N is hung from the end of the spring, as shown in Fig. 4.2. The length of the spring is now 16.3 cm.

An additional force F then extends the spring so that its length becomes 17.8 cm, as shown in Fig. 4.3.

The spring obeys Hooke's law and the elastic limit of the spring is not exceeded.

(i) Show that the spring constant of the spring is 1.8 N cm^{-1}.

[1]

© UCLES 2009

(ii) For the extension of the spring from a length of 16.3 cm to a length of 17.8 cm,

1. calculate the change in the gravitational potential energy of the mass on the spring,

change in energy = ... J [2]

2. show that the change in elastic potential energy of the spring is 0.077 J,

[1]

3. determine the work done by the force *F*.

work done = ... J [1]

5 A uniform string is held between a fixed point P and a variable-frequency oscillator, as shown in Fig. 5.1.

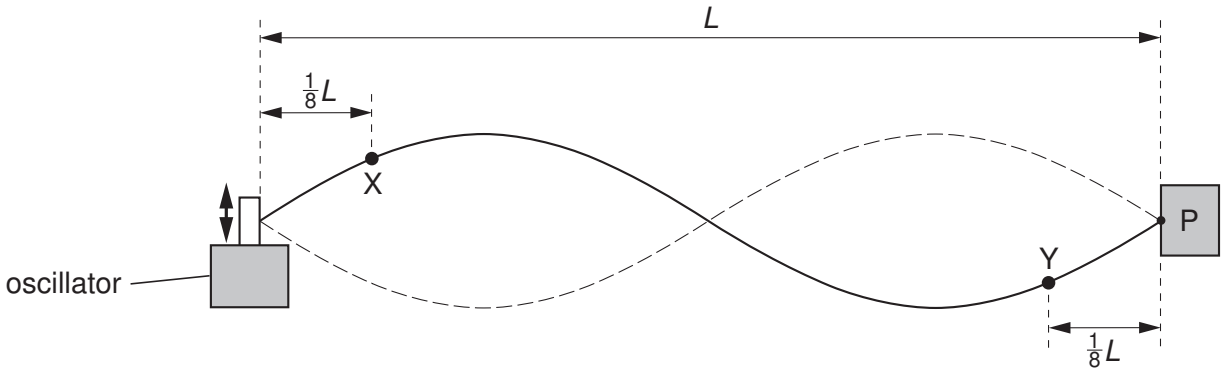

Fig. 5.1

The distance between point P and the oscillator is L.

The frequency of the oscillator is adjusted so that the stationary wave shown in Fig. 5.1 is formed.

Points X and Y are two points on the string.

Point X is a distance $\frac{1}{8}L$ from the end of the string attached to the oscillator. It vibrates with frequency f and amplitude A.

Point Y is a distance $\frac{1}{8}L$ from the end P of the string.

(a) For the vibrations of point Y, state

(i) the frequency (in terms of f),

frequency = ... [1]

(ii) the amplitude (in terms of A).

amplitude = ... [1]

(b) State the phase difference between the vibrations of point X and point Y.

phase difference = ... [1]

© UCLES 2009

(c) **(i)** State, in terms of f and L, the speed of the wave on the string.

speed = ... [1]

(ii) The wave on the string is a stationary wave.

Explain, by reference to the formation of a stationary wave, what is meant by the speed stated in **(i)**.

.....

.....

.....

.....

..... [3]

6 **(a)** Two resistors, each of resistance R, are connected first in series and then in parallel.

Show that the ratio

$$\frac{\text{combined resistance of resistors connected in series}}{\text{combined resistance of resistors connected in parallel}}$$

is equal to 4.

[1]

(b) The variation with potential difference V of the current I in a lamp is shown in Fig. 6.1.

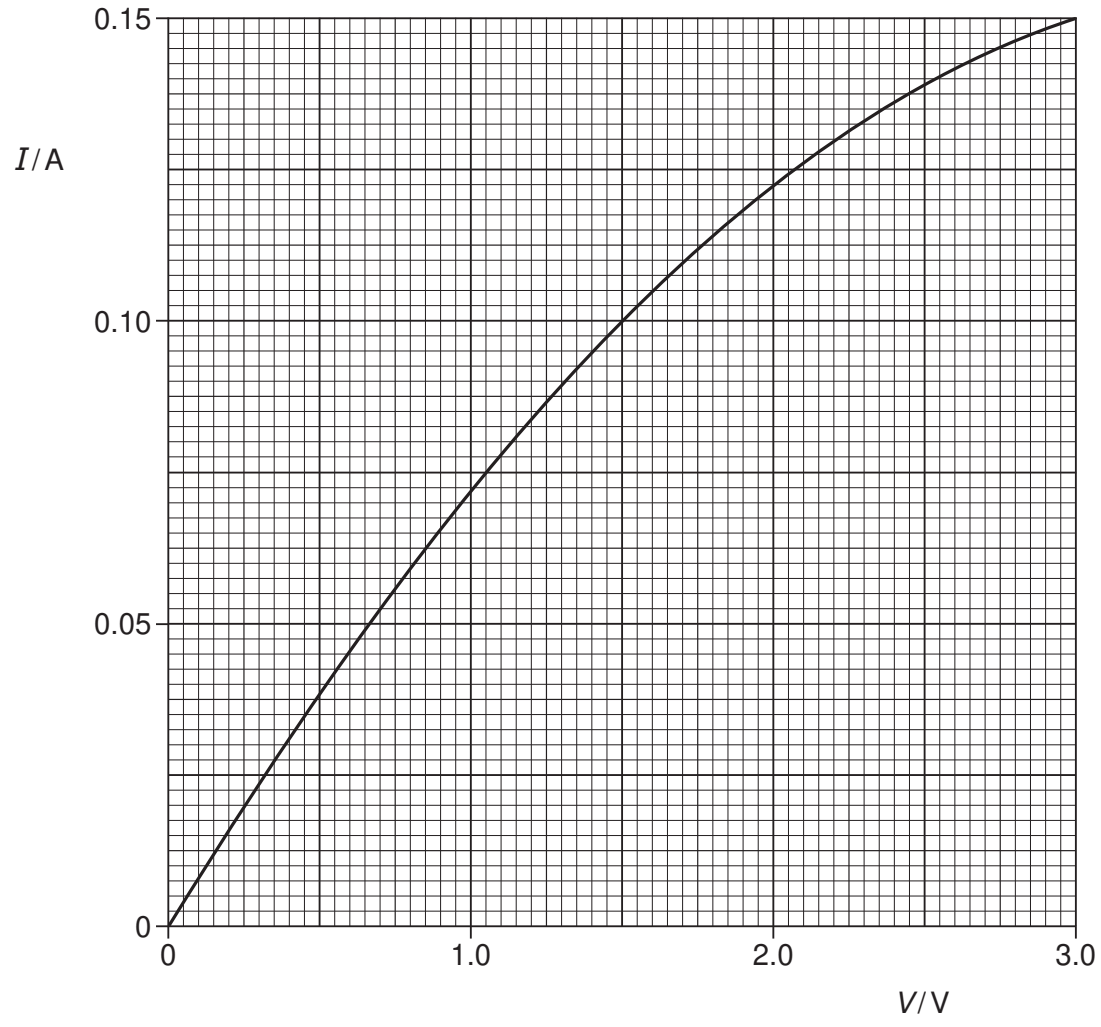

Fig. 6.1

© UCLES 2009

Calculate the resistance of the lamp for a potential difference across the lamp of 1.5V.

resistance = ... Ω [2]

(c) Two lamps, each having the *I*-*V* characteristic shown in Fig. 6.1, are connected first in series and then in parallel with a battery of e.m.f. 3.0V and negligible internal resistance.

Complete the table of Fig. 6.2 for the lamps connected to the battery.

	p.d. across each lamp/V	resistance of each lamp/Ω	combined resistance of lamps/Ω
lamps connected in series	.....	.....	.....
lamps connected in parallel	.....	.....	.....

Fig. 6.2

[4]

(d) **(i)** Use data from the completed Fig. 6.2 to calculate the ratio

$$\frac{\text{combined resistance of lamps connected in series}}{\text{combined resistance of lamps connected in parallel}}.$$

ratio = ... [1]

(ii) The ratios in **(a)** and **(d)(i)** are not equal.

By reference to Fig. 6.1, state and explain qualitatively the change in the resistance of a lamp as the potential difference is changed.

.....

.....

.....

..... [3]

© UCLES 2009

7 Tungsten-184 ($^{184}_{74}W$) and tungsten-185 ($^{185}_{74}W$) are two isotopes of tungsten.

Tungsten-184 is stable but tungsten-185 undergoes β-decay to form rhenium (Re).

(a) Explain what is meant by *isotopes*.

.....

.....

.....

..... [2]

(b) The β-decay of nuclei of tungsten-185 is spontaneous and random.

State what is meant by

(i) *spontaneous* decay,

.....

..... [1]

(ii) *random* decay.

.....

..... [1]

(c) Complete the nuclear equation for the β-decay of a tungsten-185 nucleus.

$$^{185}_{74}W \rightarrow \text{.....} + \text{.....}$$ [2]

© UCLES 2009

BLANK PAGE

BLANK PAGE

Permission to reproduce items where third-party owned material protected by copyright is included has been sought and cleared where possible. Every reasonable effort has been made by the publisher (UCLES) to trace copyright holders, but if any items requiring clearance have unwittingly been included, the publisher will be pleased to make amends at the earliest possible opportunity.

University of Cambridge International Examinations is part of the Cambridge Assessment Group. Cambridge Assessment is the brand name of University of Cambridge Local Examinations Syndicate (UCLES), which is itself a department of the University of Cambridge.